Letter 1: Quality of Engineering Graduates

Dear Sir,

Recently, there have been many negative reports about public projects. These projects involve the engineers at various stages, such as design, selection of contractor, approval of drawings, supervision of construction, commissioning and the eventual handover of a project.

Poor workmanship, evidenced by failures and delayed handover will reflect badly on the engineering profession as a whole. Sadly, additional public funds are requested to rectify the poor workmanship, or even to conduct safety inspections. This issue should be discussed by the IEM for the purpose of educating its members about what went wrong and how to prevent a recurrence.

IEM could form several committees comprising experts from various fields who can be called upon to provide their input in the event of such occurrences. By being proactive, IEM will be able to raise the public's perception of the engineering profession. By continuing to provide advice and comments, IEM would become a credible body not only among engineers but in Malaysia in general.

Hence, when such events occur, the first body that is called upon to investigate could be IEM. As a service to the public, I am sure that members of IEM would be willing to provide their advice for free, hence saving the rakyat millions in tax payer's money that could be better utilised elsewhere.

IEM should then write up on these events as case studies for presentation to its members, with suggestions on what could have been done to prevent such events or minimising the likelihood of its occurrence. These could form part of the mandatory trainings that engineers have to attend. By doing so, and imparting the lessons learnt amongst all of our colleagues, we can help raise the standard of the engineering profession in Malaysia.

Another area that should be considered together with this is the drafting of contracts. Case studies of such contracts, and the weaknesses therein should be brought to the attention of engineers so that it can be avoided in future. This should also perhaps be made mandatory training for all Engineers. ■

Engr. Shyam Lakshmanan, MIEM, P.Eng.
28 July 2007

Chief Editor Reply

Dear Sir,

We thank Engr. Shyam Lakshmanan for his letter (which was also recently been published both on 17 April 2008 in the 'The Star' and also on 23 April 2008 in the New Straits Times). His letter could not be replied straightaway as there is certain decorum for every thing and official answers should be expected from authorised people who are deal with public relations and giving official published statements.

Though some have shared this perception, the Standing Committee on Examinations and Training had decided to set up a Sub-Committee to conduct a survey to gather data on this matter.

During our recent April 2008 IEM Annual General Meeting, our Y. Bhg. Dato' Paduka IEM President has indicated the way forward for engineers, including The IEM to take the lead for the paradigm shift from 'Nation Builders to Nation Movers' in "educating from young, improving the training of engineers and encouraging a better gender ration in engineering" to address this matter.

The duty should not just lie with somebody else. In fact every one of us should chip in with our contribution in this matter, no matter how small it might be. As peers, we should be a mentor to fresh graduates and hone their skills and knowledge. The Board of Engineers together with the National Accreditation Board and the Engineering Accreditation Council should review the topics taught in the Institutions of Higher Learning and to ensure these are relevant to the present requirement.

IEM could also help through its various Technical Divisions as well as the IEM Training Center to improve the situation through their organisation of training courses and seminars. Hence it is the life-long learning process where everyone should play the part in leaving a legacy to improve all our fellow engineers as a responsible corporate citizen. ■

Letter 2: IEM Bulletin and other Publications

This includes an excerpt of the reply given by our Y. Bhg. Dato' Paduka on questions raised by Engr. Tham Kum Weng on 'letters/articles for IEM' during our recent 49th AGM of IEM held on 19 April 2008) which was to be published in the IEM Bulletin for others who did not attend the IEM 49th AGM on that day.

Q1. Is there a standard procedure?
Yes. IEM has a standard procedure. Under the ISO requirements, there must be a standard procedure including deadlines to complete a task.

Q2. Is there a guide for the timing of publication?
Yes. There is a guide and is for the processing of articles contributed depending on the nature of the articles which has to be peer reviewed before consideration for publication.

If a "contribution" is deemed unsuitable for publication, can the Editorial Board inform the writer accordingly stating the reason/rationale why the "contribution" cannot be accepted?
Yes. This is sometimes done for more complex articles. Some articles

were held back due to various reasons which were still being held back for deliberations by the Editorial Board and awaiting feedback from both the writer and authors of the respective articles.

Q4. For "Letter to Editor" and certain feature articles, could the date of submission be printed so that the readers will know how current is the subject matter?
Yes. This could be considered for implementation where appropriate.

Q5. What is the date of Engr. On's letter?
The chronological events are as follows:
21.11.07 Forwarded Dr On's e-mail to C&S TD for liaison with author to avoid duplication of work.

Q6. Perhaps my letter could be published as the writers took time and effort to clarify?
Actually if you are referring to your letter which was received on 14 August 2007, on the article "Strengthening of Reinforced Concrete Structures", it was already been published in November 2007 issue of the IEM Bulletin.

Q7. My comment on "Appraisal of Concrete Bridges" also published in July 2007 issue of the IEM Bulletin was not responded. What is the status?
We only received the e-mail on 14 August 2007 which was on the issue of "Strengthening of Reinforced Concrete Structure" and not on the "Appraisal of Concrete Bridges".

Only after receiving your request to bring this matter to the Any Other Matters (AOB) at the April 2008 IEM AGM that checks were made and there were no records that the mentioned articles were not received. On further correspondence between your good self and the IEM Secretariat that we received the articles which we acknowledged receipt of articles accordingly on 18 March 2008 as follows:

1. *Appraisal of Concrete Bridges*
2. *The Golden Triangle Cities (Travel)*
3. *Letter to Editor on Impact of Technical Articles on IEM*

Q8. For the year 2007, what are the total number of articles, papers, comments, write-ups, reports, features, etc received by IEM and how many were actually selected/approved for publications in the Bulletin, Journal, etc in year 2007 and how many are yet to be published in year 2008?
For the year 2007 and 2008 (31.3.08) we received:

Papers	*335*	*48*	*Pending*	*26*	*5*
Published	*309*	*43*	*Rejected*	-	-

In addition, IEM would welcome contributions of articles to both the Bulletin and Journal. The monthly theme for the IEM Bulletin for the month of June 2008 is on Water Resources Engineering and that for July 2008 is on Energy and Power respectively and we hope members will contribute interesting articles for the benefit of all readers of the IEM Bulletin. ■

COMMENTS

Comments to "Can Lessons be Learned from a Displaced Single Storey Staff Quarters Building Allegedly Due to Adjacent U-drain Construction?"

Dear Editor of JURUTERA,

The feature article titled "Can Lessons be Learned from a Displaced Single Storey Staff Quarters Building Allegedly Due to Adjacent U-drain Construction" appearing in February 2007 JURUTERA is referred.

The feature article promised an interesting read with what is a case history to illustrate an example of a purportedly less than flattering engineering design that ended up in a distressed construction. Sadly, it only concerned itself with evaluating the effects of loading eccentricity on the axial carrying capacity of a 150 mm. x 150 mm. r.c. pile and pronouncing a dim view of civil engineers in the country. It did not provide any meaningful linkage to the observed distress i.e. the "shear failure" in the 200 mm. x 200 mm. r.c. column stumps that appears to have been the primary thrust of the forensic investigation made by the author.

Meanwhile, some comments on the treatment of eccentric load transfer from a column stump to the pile are in order here. The simplified structural system depicted in Figure 1 is the one adopted by the author in the feature article. (The circle denotes a non-moment capable connection.) This would also have been the system of choice of most design engineers as it places the most onerous demands on the pile since the column stump is assumed to contribute nothing to deal with the moment couple generated by the eccentricity, e.

However, when the other simplified structural system shown in Figure 2 is employed the pile no longer has to accommodate the moment couple arising from the same eccentricity, e. Its axial carrying capacity does not get degraded in any way now though the onus for resisting the eccentric moment is wholly shifted to the column stump. This illustrates the different idealizations available to the design engineer both of which when adequately designed and detailed would not lead to failure/collapse.

Now in reality, the structural system shown in Figure 3 is usually detailed and constructed as such. All framing elements are monolithically and 'robustly' linked to each other where they

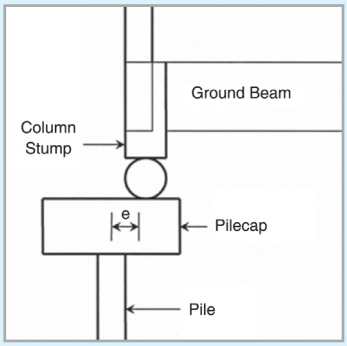

Figure 1

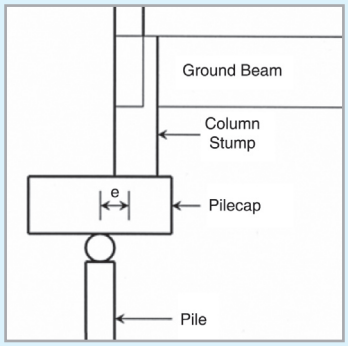

Figure 2

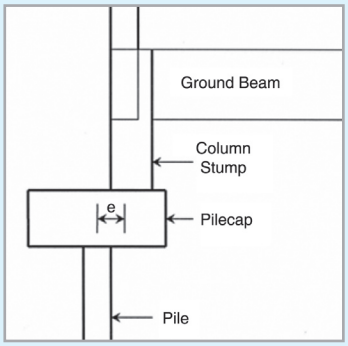

Figure 3

connected. In the author's case, the column stump possesses a stiffness about 3 times that of the pile (when the effects of ground confinement, material modulii and actual effective flexural lengths are ignored). The pile's share of bending moments generated by the eccentric load transfer is then no more than 25 percent of the total eccentricity moment and the degradation in the pile's axial capacity may nowhere be as large as what the author had argued for in support of his postulation that the piles had been overloaded and therefore structurally damaged.

Whilst on the matter of forensic investigation, it is opportune to take a detached look at the practice of using the same procedures developed primarily for design purposes in order to identify the cause of a construction failure. This is of importance since a large number of failure investigations are known to have been undertaken using such an approach; undoubtedly where expediency is desired.

Analysis procedures evolved for routine design use are loaded with partial factors; to pare down on design stresses from material strengths and at the same time to multiply up on applied loading all to ensure that failure would not be approached under the circumstances embraced for design. In fact even prior to factoring down, the characteristic strengths for materials used in reinforced concrete work are configured such that no more than 5 percent of the tested specimens would fall lower. In the case of high tensile steel reinforcement, it is the 0.2 percent proof stress and not the higher breaking strength that is used.

The treatment of disturbing forces and resisting capacities (both already embodying their respective partial factors) necessary to attain equilibrium in the analysis is invariably simplified and idealized to ease computational efforts at the expense of some departures from reality. Then, there are also design procedures abound still that contain considerable elements of empiricism, mostly spawned from statistics 2 processings and bearing little mechanistic relevance to the objective at hand.

Thus, a mere inability of a system (or for that matter the key parameter in the system) to meet the design expectations is no reason be taken to mean that its failure is bound to take place. To conclude on the cause of a failure by simply reversing upon the procedures adopted by an accepted design process cannot then be valid. Readers ought to always be wary of findings drawn on investigations into the failure of any construction made in such a manner; particularly where no exhaustive validation of the postulation(s) by first principles or fundamental engineering mechanics (even of the simplest form) are advanced. Similarly, any piece of socalled engineering judgement made out without the underpinnings of mathematics, physics and mechanics of materials is realistically worthless and would serve nothing more than rhetoric.

Appraisal of the author's 2 interaction diagrams reveals the presence of 'partial factors of safety' of 1.50 and 1.05 for concrete and steel respectively being used to generate the diagrams. The suggested 'failure' loads must therefore have been arrived at on the basis of considerably reduced material stresses rather than their true strengths which would have governed the real failure; even then, only had the structural system been truly as depicted by the author.

It would be rather tragic for the engineering fraternity, as well as society at large, for published case histories proffering inadequately verified or unvalidated causes for engineering failures to continue building up in the technical literature and public domain and be available to be exploited for subsequent citation and reference. (Worse still, By-Laws are known to have been promulgated and enacted on the basis of such findings.) The case of the Highland Tower collapse has been one such very popular example as seen by its being cited yet again in 'Is the Ground in Ulu Klang Unstable?' in another feature article also in February 2007 JURUTERA. The validity of the failure mechanism postulated in MPAJ (1994) for the building's collapse had been briefly re-evaluated in Yee (2005) employing the engineering data reported or described in the former but was found to have been unable to support the postulation offered despite the very dramatic and vivid description offered for the whole failure process. ■

Regards,
Engr. Yee Thien Seng, M.I.E.M., P. Eng.
19 June 2007

References

[1] MPAJ (1994). "Report of the Inquiry Committee into the Collapse of Block 1 and the Stability of Blocks 2 and 3 Highland Towers Condominium, Hulu Klang." Report of the Technical Committee of Investigation.

[2] Yee, T.S. (2005). "The Collapse of Highland Towers Condominium Block 1 – A Technical Revisit with Soil Mechanics." IEM-GSM Oktoberforum 2005 : Case Histories in Engineering Geology & Geotechnical Engineering, Petaling Jaya.